Norsat International Inc.

Innovative Communication Solutions

BDC

KA-BAND EXT REF 9000X SERIES

SPECIFICATIONS

Noise Figure	18 dB max. at room temp.
L.O. Stability	Phase Locked to External Reference
Phase Noise (SSB) max.	Depends on External Reference
Input VSWR	2.2 : 1 max.
Output VSWR	2.2 : 1 max.
Gain	25 dB typ., 22 dB min., 28 dB max.
Gain Flatness (over full band)	≤ 4 dB p-p
Output P1dB	+ 5 dBm min.

DC Power	+ 15V to + 24V DC
Current	350 mA max.
Input (waterproof)	SMA-Connector (50 Ohm)
Output (waterproof)	F-Connector (75 Ohm) N-Connector (50 Ohm) SMA-Connector (50 Ohm)
Dimensions (L x W x H)	90 mm x 78 mm x 40 mm (3.54 in x 3.07 in x 1.57 in)
Weight	400 g (14.11 oz)
Operating Temperature	- 40 to + 60˚C
Storage Temperature	- 40 to + 80˚C
External Ref Freq	10 MHz (sine-wave), -10 to 0 dBm
Protection Grade	IP67

FREQUENCY BANDS

	9000XA	9000XB	9000XC	9000XD
Frequency Band (GHz)	18.20 - 19.20	19.20 - 20.20	20.20 - 21.20	21.20 - 22.20
L.O. Frequency (GHz)	17.75	18.25	19.25	20.25
IF Frequency (MHz)	950 - 1950	950 - 1950	950 - 1950	950 - 1950

HOW TO ORDER

BDC-9000XBN

- **CONNECTOR**
  - **F -** 75 Ohm
  - **N -** 50 Ohm
  - **S -** SMA 50 Ohm
- **FREQUENCY**
  - **A -** 18.2 to 19.2 GHz
  - **B -** 19.2 to 20.2 GHz
  - **C -** 20.2 to 21.2 GHz
  - **D -** 21.2 to 22.2 GHz
- **EXTERNAL REFERENCE**
- **BDC SERIES #**

MECHANICAL DIAGRAM

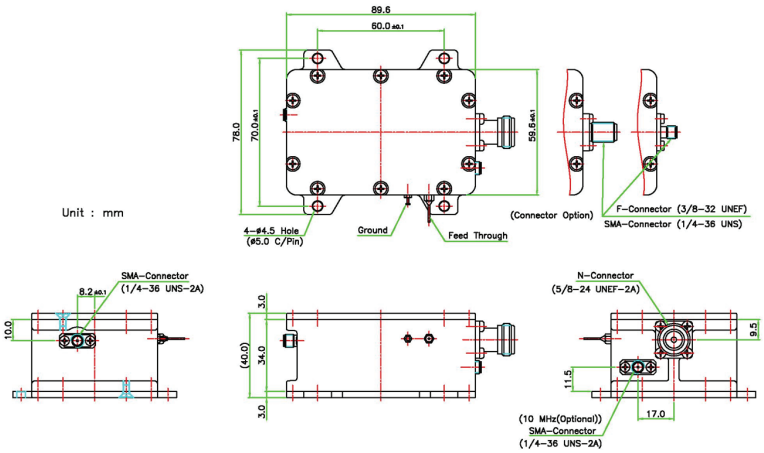

Esatcom Inc.

Authorized Norsat Distributor

Tel: 718.276.0800

www.esatcom.com

Email: sales@esatcom.com

© Copyright Norsat International Inc. All Rights Reserved. Specifications are subject to change without notice.
Final product may not be as illustrated. The information contained herein does not constitute part of any order or contract.