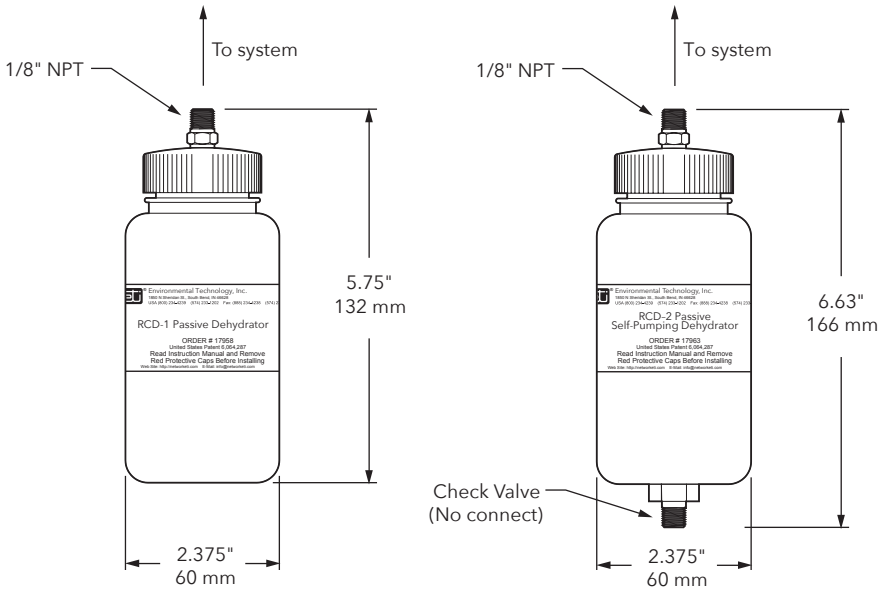

NETCOM MODEL RCD-1
LOW COST PASSIVE DEHYDRATOR

NETCOM MODEL RCD-3
LOW COST PASSIVE DEHYDRATOR

NETCOM MODEL RCD-5
LOW COST PASSIVE DEHYDRATOR

NETCOM MODEL RCD-2
LOW COST PASSIVE SELF-PUMPING™ DEHYDRATOR

NETCOM MODEL RCD-4
LOW COST PASSIVE SELF-PUMPING™ DEHYDRATOR

NETCOM MODEL RCD-6
LOW COST PASSIVE SELF-PUMPING™ DEHYDRATOR

FEATURES & BENEFITS

- Keep waveguide and coax dry
- Low Cost
- Reliable
- No power required
- Long desiccant life
- Simple installation
- Desiccant indicates when to regenerate/replace
- Self pressurizing (RCD–2, RCD–4, RCD–6)

DESCRIPTION

The RCD line of passive dehydrators keeps small volume waveguide and coax systems dry. These dehydrators may also be used to supply short term protection for larger systems; during power interruptions, maintenance, storage or transportation.

An RCD Passive Dehydrator, such as the RCD-1, contains a drying agent sealed in a pressure tight container. A 1/8" NPT pressure fitting is provided for connecting it to the system to be protected. Gas diffusion insures that the desiccant is exposed to any water vapor present in the system. Unlike mechanically pressurized systems, an RCD passive dehydrator works best when the waveguide or coax system is tightly sealed.

Containing just one moving part, an RCD Self-Pumping™ Passive Dehydrator, such as the RCD-2, uses variations in ambient temperature and barometric pressure to pressurize the waveguide or coaxial cable. When the pressure inside the waveguide is less than atmospheric, a sensitive check-valve in bottom of the bottle opens. This allows ambient air to enter the Waveguide or coax after it has passed through and been dried by the desiccant. When the internal pressure exceeds atmospheric pressure, the check-valve closes, thus holding the system at a positive pressure.
This feature improves performance in two ways. First, it increases drying efficiency by keeping the system at a positive pressure: generally, dry air leaking out rather than moist air leaking in. Second, this feature insures controlled dry air circulation in the waveguide or coaxial cable. When compared to a passive dehydrator that relies upon gas diffusion, such as the RCD-1, the RCD-2 Self-Pumping Passive Dehydrator's circulation dramatically improves response to environmental changes.

Depending upon the system volume and tightness, as well as the environmental conditions at the site, the desiccant lasts 12 to 18 months, or longer, before requiring regeneration or replacement. Conditions such as a leaky system and damp climate may reduce desiccant longevity.

For complete information describing its application, installation and features, please contact Customer Service or check on the web at http://networketi.com.

SPECIFICATIONS

Maximum dehydrated volume	One cubic foot
Desiccant replacement/regeneration interval	Typically 12 to 18 months, or more
Rated pressure	Up to 8 psig
Maximum pressure	20 psig
Check valve sensitivity (RCD–2, 4, 6)	Nominally 0.1 psig
Desiccant RCD–1, 2, 3, 4	Sorbead Orange alumino-silica gel
Desiccant RCD–5, 6	Molecular sieve desiccant with blue indicating gel

ORDERING INFORMATION

ORDER NUMBER	DESCRIPTION
17958	RCD–1 Passive Dehydrator, Outdoor
17963	RCD–2 Self-Pumping Passive Dehydrator, Outdoor
24649	RCD–3 Passive Dehydrator, Indoor
24650	RCD–4 Self-Pumping Passive Dehydrator , Indoor
24642	RCD–5 Passive Dehydrator, Molecular Sieve
24643	RCD–6 Self-Pumping Passive Dehydrator, Molecular Sieve

The ETI logo and We Manage Heat are registered trademarks of ETI. ES is a trademark of ETI.
Copyright © 2008 ETI. All rights reserved.

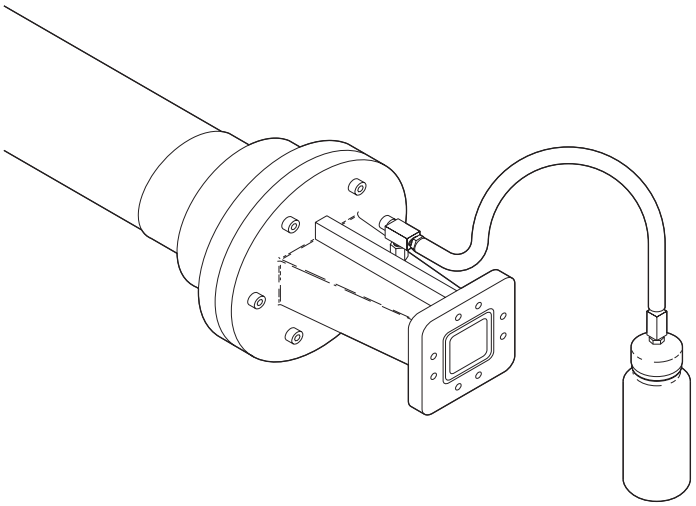

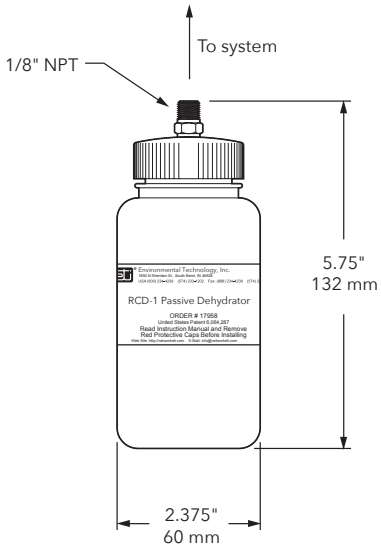

LIMITED WARRANTY

ETI's two year limited warranty covering defects in workmanship and materials applies. Contact Customer Service for complete warranty information.

DISCLAIMER

ETI makes no representations or warranties, either expressed or implied, with respect to the contents of this publication or the products that it describes, and specifically disclaims any implied warranties of merchantability or fitness for any particular purpose. ETI reserves the right to revise this publication, and to make changes and improvements to the products described in this publication, without the obligation of ETI to notify any person or organization of such revisions, changes or improvements.

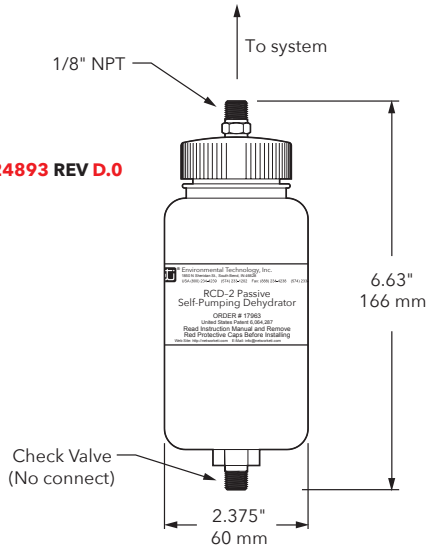

3628 Francis Lewis Blvd.
Flushing, NY 11358
www.esatcom.com
Tel: 718.799.0084
Email: sales@esatcom.com